Work Order ID 68180

Thursday, April 07, 2011 1:55:52 PM

Item ID: D407-667-105 **Accept** **Setup Start** **Stop**

Revision ID:

Item Name: Crosstube Fwd

Start Date: 4/7/2011 **Start Qty:** 1.00 **Cust Item ID:**

Required Date: 4/27/2011 **Req'd Qty:** 1.00 **Customer:**

Reference:

Approvals: **Process Plan:** N **Date:** 11-04-7 **Tooling:** _____ **Date:** _____ **Run Start** **Stop**

QC: _____ **Date:** _____ **SPC (Y/N):** _____ **Date:** _____

Sequence ID/ Work Center ID	Operation Description	Set Up/ Run Hours	Tool ID	Tool #	Plan Code	Accept Qty	Reject Qty	Reject Number	Insp. Stamp
Draw Nbr	**Revision Nbr**								
D407-667-145	Rev C								
100	DOCUMENT CONTROL	0.00							
DC	**Memo**	0.00							
Document Control	Photocopy bluefile and create labels as per PPP D407-667-105 CHG003		S 11/06/03						
110	Packaging	0.00							
Packaging	**Memo**	0.00	SAD 11-05-26			1			
Packaging									
120	BENDING MACHINE - CROSSTUBES	0.00							
CNC Bend 2	**Memo**	0.00							
CNC Alpha 160 Bender	Bend tube as per Dwg D407-667-145 using CNC bender program 407-fw		SAD 11-05-26						

Dart Aerospace Ltd

W/O:	WORK ORDER CHANGES						
DATE	STEP	PROCEDURE CHANGE	By	Date	Qty	Approval Chief Eng / Prod Mgr	Approval QC Inspector

Part No: _____ **PAR #:** _____ **Fault Category:** _____ **NCR:** Yes No **DQA:** _____ **Date:** _____

Resolution: _____ **Disposition:** _____ **QA: N/C Closed:** _____ **Date:** _____

NCR:	WORK ORDER NON-CONFORMANCE (NCR)							
DATE	STEP	Description of NC Section A	Corrective Action Section B			Verification Section C	Approval Chief Eng	Approval QC Inspector
			Initial Chief Eng	Action Description Chief Eng	Sign & Date			

NOTE: Date & initial all entries

H:\FORMS\Quality Assurance\approved QA\NCRWO RevE

Work Order ID 68180

Thursday, April 07, 2011 1:55:52 PM

Item ID: D407-667-105

Revision ID:

Item Name: Crosstube Fwd

Start Date: 4/7/2011 **Start Qty:** 1.00

Required Date: 4/27/2011 **Req'd Qty:** 1.00

Reference:

Accept

Setup Start

Stop

Cust Item ID:

Customer:

Run Start

Stop

Approvals: **Process Plan:** _____ **Date:** _____ **Tooling:** _____ **Date:** _____

QC: _____ **Date:** _____ **SPC (Y/N):** _____ **Date:** _____

Sequence ID/ Work Center ID	Operation Description	Set Up/ Run Hours	Tool ID	Tool #	Plan Code	Accept Qty	Reject Qty	Reject Number	Insp. Stamp
130	QC15- Crosstube Dimensional Check	0.00							
QC	**Memo**	0.00							
Quality Control									

8 w/o 5/26

Dart Aerospace Ltd

W/O:		WORK ORDER CHANGES					
DATE	STEP	PROCEDURE CHANGE	By	Date	Qty	Approval Chief Eng / Prod Mgr	Approval QC Inspector

Part No: _____ **PAR #:** _____ **Fault Category:** _____ **NCR:** Yes No **DQA:** _____ **Date:** _____

Resolution: _____ **Disposition:** _____ **QA: N/C Closed:** _____ **Date:** _____

NCR:		WORK ORDER NON-CONFORMANCE (NCR)						
DATE	STEP	Description of NC Section A	Corrective Action Section B			Verification Section C	Approval Chief Eng	Approval QC Inspector
			Initial Chief Eng	Action Description Chief Eng	Sign & Date			

NOTE: Date & initial all entries

H:\fFORMS\Quality Assurance\approved QA\NCRWO RevE

Work Order ID 68180

Thursday, April 07, 2011 1:55:52 PM

Item ID: D407-667-105 **Accept** **Setup Start**

Revision ID: **Stop**

Item Name: Crosstube Fwd

Start Date: 4/7/2011 **Start Qty:** 1.00 **Cust Item ID:**

Required Date: 4/27/2011 **Req'd Qty:** 1.00 **Customer:**

Reference:

Approvals: **Process Plan:** _____ **Date:** _____ **Tooling:** _____ **Date:** _____ **Run Start**

QC: _____ **Date:** _____ **SPC (Y/N):** _____ **Date:** _____ **Stop**

Sequence ID/ Work Center ID	Operation Description	Set Up/ Run Hours	Tool ID	Tool #	Plan Code	Accept Qty	Reject Qty	Reject Number	Insp. Stamp
140		0.00							
	Crosstubes								
Crosstubes		0.00							
Crosstubes									

Memo

1- scrib batch # inside of cuff

2-Drill pilot holes in tube using drill Jig DT8541 & DT8542 as per Dwg D407-667-145. Drill all (3) top holes use drill table jig DT8577 hole #1,#11 to set up towers, as per QSI0010.

3-Drill and Ream all holes in tube to finish size using drill Jig DT8541 & DT8542 as per Dwg D407-667-145 Check dimensions between holes on all four sides.

4-Flip tube and switch drilling Jigs from right to left, left to right. Locate Jigs off existing holes using "T" pins.

5-Drill pilot holes using drill Jig DT8541 & DT8542 as per Dwg 407-667-145. Drill only the top (2) holes.

6-Drill & ream the top (2) holes to finish size using drill Jig DT8541 & DT8542 as per Dwg D407-667-145

7-Drill Fwd rivet holes using drill Jig DT8787FWD as per Dwg D206-667-145.Note: Fwd side has 3x top holes.

8-Drill Aft rivet holes using drill Jig DT8787AFT as per Dwg D407-667-145.

9-C'sink holes as per Dwg D407-667-145. Allow rivet to sit below surface to compensate for paint.

10 -Deburr & Inspect for surface damage. Repair damage within limits as per

JW
SAD
11-05-26

SAD
11-05-31

Dart Aerospace Ltd

W/O:		WORK ORDER CHANGES					
DATE	STEP	PROCEDURE CHANGE	By	Date	Qty	Approval Chief Eng / Prod Mgr	Approval QC Inspector

Part No: _____ **PAR #:** _____ **Fault Category:** _____ **NCR:** Yes No **DQA:** _____ **Date:** _____

Resolution: _____ **Disposition:** _____ **QA: N/C Closed:** _____ **Date:** _____

NCR:		WORK ORDER NON-CONFORMANCE (NCR)						
DATE	STEP	Description of NC Section A	Corrective Action Section B			Verification Section C	Approval Chief Eng	Approval QC Inspector
			Initial Chief Eng	Action Description Chief Eng	Sign & Date			

NOTE: Date & initial all entries

H:\fFORMS\Quality Assurance\approved QA\NCRWO RevE

Work Order ID 68180

Thursday, April 07, 2011 1:55:52 PM

Item ID: D407-667-105 **Accept** **Setup Start** **Stop**

Revision ID:

Item Name: Crosstube Fwd

Start Date: 4/7/2011 **Start Qty:** 1.00 **Cust Item ID:**

Required Date: 4/27/2011 **Req'd Qty:** 1.00 **Customer:**

Reference:

Approvals: **Process Plan:** _____ **Date:** _____ **Tooling:** _____ **Date:** _____ **Run Start** **Stop**

QC: _____ **Date:** _____ **SPC (Y/N):** _____ **Date:** _____

Sequence ID/ Work Center ID	Operation Description	Set Up/ Run Hours	Tool ID	Tool #	Plan Code	Accept Qty	Reject Qty	Reject Number	Insp. Stamp
	Dwg D407-667-145								
150	Crosstubes Chemical Conversion	0.00							
HandFXtube	**Memo**	0.00	SAD	n-06-01					
Hand Finishing Crosstubes									
160	QC3- Inspect Part Finish	0.00							
QC	**Memo**	0.00	S 11/06/01						
Quality Control									
170	QC5- Inspect part completeness to step on W/O	0.00							
QC	**Memo**	0.00	S 11/06/01						
Quality Control									

Dart Aerospace Ltd

W/O:		WORK ORDER CHANGES					
DATE	STEP	PROCEDURE CHANGE	By	Date	Qty	Approval Chief Eng / Prod Mgr	Approval QC Inspector

Part No: _____ **PAR #:** _____ **Fault Category:** _____ **NCR:** Yes No **DQA:** _____ **Date:** _____

Resolution: _____ **Disposition:** _____ **QA: N/C Closed:** _____ **Date:** _____

NCR:		WORK ORDER NON-CONFORMANCE (NCR)						
DATE	STEP	Description of NC Section A	Corrective Action Section B			Verification Section C	Approval Chief Eng	Approval QC Inspector
			Initial Chief Eng	Action Description Chief Eng	Sign & Date			

NOTE: Date & initial all entries

H:\fFORMS\Quality Assurance\approved QA\NCRWO RevE

Work Order ID 68180

Thursday, April 07, 2011 1:55:52 PM

Item ID: D407-667-105 **Accept** **Setup Start** **Stop**

Revision ID:

Item Name: Crosstube Fwd

Start Date: 4/7/2011 **Start Qty:** 1.00 **Cust Item ID:**

Required Date: 4/27/2011 **Req'd Qty:** 1.00 **Customer:**

Reference:

Run Start **Stop**

Approvals: **Process Plan:** _____ **Date:** _____ **Tooling:** _____ **Date:** _____

QC: _____ **Date:** _____ **SPC (Y/N):** _____ **Date:** _____

Sequence ID/ Work Center ID	Operation Description	Set Up/ Run Hours	Tool ID	Tool #	Plan Code	Accept Qty	Reject Qty	Reject Number	Insp. Stamp
180	Outsource process - NDT per QSI038 4.1	0.00							
Outsource2	**Memo**	0.00							
Outsource process - NDT	OUTSIDE SERVICE -CROSSTUBES Liquid Penetrant Inspection as per QSI 038 Or Issue P/O: 14223 LPI as per ASTM 1417 Level 2 Attach copy of NDT results to work order								
190	Packaging	0.00							
Packaging	**Memo**	0.00							
Packaging	Inspect for transit damage Ensure copy of NDT results attached to work order.								
200	QC5- Inspect part completeness to step on W/O	0.00							
QC	**Memo**	0.00							
Quality Control	Inspect for damage & ensure results are as per Dwg D206-667-145								

Dart Aerospace Ltd

W/O:	WORK ORDER CHANGES						
DATE	STEP	PROCEDURE CHANGE	By	Date	Qty	Approval Chief Eng / Prod Mgr	Approval QC Inspector

Part No: _____ **PAR #:** _____ **Fault Category:** _____ **NCR:** Yes No **DQA:** _____ **Date:** _____

Resolution: _____ **Disposition:** _____ **QA: N/C Closed:** _____ **Date:** _____

NCR:	WORK ORDER NON-CONFORMANCE (NCR)							
DATE	STEP	Description of NC Section A	Corrective Action Section B			Verification Section C	Approval Chief Eng	Approval QC Inspector
			Initial Chief Eng	Action Description Chief Eng	Sign & Date			

NOTE: Date & initial all entries

H:\fFORMS\Quality Assurance\approved QA\NCRWO RevE

Work Order ID 68180

Thursday, April 07, 2011 1:55:52 PM

Item ID: D407-667-105 **Accept** **Setup Start** **Stop**

Revision ID:

Item Name: Crosstube Fwd

Start Date: 4/7/2011 **Start Qty:** 1.00 **Cust Item ID:**

Required Date: 4/27/2011 **Req'd Qty:** 1.00 **Customer:**

Reference:

Approvals: **Process Plan:** _____ **Date:** _____ **Tooling:** _____ **Date:** _____ **Run Start** **Stop**

QC: _____ **Date:** _____ **SPC (Y/N):** _____ **Date:** _____

Sequence ID/ Work Center ID	Operation Description	Set Up/ Run Hours	Tool ID	Tool #	Plan Code	Accept Qty	Reject Qty	Reject Number	Insp. Stamp
210		0.00							
SprayPaint	SprayPaint								
SprayPaint	**Memo**	0.00							
Spray Painting	1-Prime inside and outside crosstube as per QSI 005 4.2 2-Paint outside crosstube with White Imron as per QSI 005 4.2 PRIME: Start Time: 9 00 Fininsh Time: 10 00 PAINT: Start Time: 2 00 Finish Time: 3 00								
220	QC14- Inspect Spray Paint	0.00							
QC	**Memo**	0.00							
Quality Control	Then,Wrap in plastic bag to protect from scratches								

AT 11-06-01

11-06-02

Dart Aerospace Ltd

W/O:		WORK ORDER CHANGES					
DATE	STEP	PROCEDURE CHANGE	By	Date	Qty	Approval Chief Eng / Prod Mgr	Approval QC Inspector

Part No: _____ **PAR #:** _____ **Fault Category:** _____ **NCR:** Yes No **DQA:** _____ **Date:** _____

Resolution: _____ **Disposition:** _____ **QA: N/C Closed:** _____ **Date:** _____

NCR:		WORK ORDER NON-CONFORMANCE (NCR)						
DATE	STEP	Description of NC Section A	Corrective Action Section B			Verification Section C	Approval Chief Eng	Approval QC Inspector
			Initial Chief Eng	Action Description Chief Eng	Sign & Date			

NOTE: Date & initial all entries

H:\FORMS\Quality Assurance\approved QA\NCRWO RevE

Work Order ID 68180

Thursday, April 07, 2011 1:55:52 PM

Item ID: D407-667-105 **Accept** **Setup Start**

Revision ID: **Stop**

Item Name: Crosstube Fwd

Start Date: 4/7/2011 **Start Qty:** 1.00 **Cust Item ID:**

Required Date: 4/27/2011 **Req'd Qty:** 1.00 **Customer:**

Reference:

Run Start

Approvals: **Process Plan:** _____ **Date:** _____ **Tooling:** _____ **Date:** _____ **Stop**

QC: _____ **Date:** _____ **SPC (Y/N):** _____ **Date:** _____

Sequence ID/ Work Center ID	Operation Description	Set Up/ Run Hours	Tool ID	Tool #	Plan Code	Accept Qty	Reject Qty	Reject Number	Insp. Stamp
230		0.00							
Crosstubes	Crosstubes					RT	11	-06	02
Crosstubes	**Memo**	0.00							
	1-Install support using 0.03" to 0.06" thick layer of magnobond 6398 per QSI 015. Let cure for 12h after installation and prior to packaging. Note: (3) top holes should be facing up. A/R Magnobond 6398 : 116677								
	2-Torque clamps to 80-100 in lb								
	3-Install nut plates as per Dwg D407-667-145. Touch-up rivet heads with Imron paint.								
240	QC5- Inspect part completeness to step on W/O	0.00							
QC	**Memo**	0.00							
Quality Control									

8 mo6/03

Dart Aerospace Ltd

W/O:		WORK ORDER CHANGES					
DATE	STEP	PROCEDURE CHANGE	By	Date	Qty	Approval Chief Eng / Prod Mgr	Approval QC Inspector

Part No: _____ **PAR #:** _____ **Fault Category:** _____ **NCR:** Yes No **DQA:** _____ **Date:** _____

Resolution: _____ **Disposition:** _____ **QA: N/C Closed:** _____ **Date:** _____

NCR:		WORK ORDER NON-CONFORMANCE (NCR)						
DATE	STEP	Description of NC Section A	Corrective Action Section B			Verification Section C	Approval Chief Eng	Approval QC Inspector
			Initial Chief Eng	Action Description Chief Eng	Sign & Date			

NOTE: Date & initial all entries

H:\fFORMS\Quality Assurance\approved QA\NCRWO RevE

Work Order ID 68180

Thursday, April 07, 2011 1:55:52 PM

Item ID: D407-667-105 **Accept** **Setup Start**

Revision ID: **Stop**

Item Name: Crosstube Fwd

Start Date: 4/7/2011 **Start Qty:** 1.00 **Cust Item ID:**

Required Date: 4/27/2011 **Req'd Qty:** 1.00 **Customer:**

Reference:

Run Start

Approvals: **Process Plan:** _____ **Date:** _____ **Tooling:** _____ **Date:** _____ **Stop**

QC: _____ **Date:** _____ **SPC (Y/N):** _____ **Date:** _____

Sequence ID/ Work Center ID	Operation Description	Set Up/ Run Hours	Tool ID	Tool #	Plan Code	Accept Qty	Reject Qty	Reject Number	Insp. Stamp
250	Pick Kit	0.00							
Packaging						11/6/35			
	Memo	0.00							
Packaging									
260	QC4- 100% Inspect kits for completeness	0.00							
QC		8 4/06/13							
	Memo	0.00							
Quality Control									
270		0.00							
Packaging	Packaging								
	Memo	0.00							
Packaging									

Identify and pack for shipping as per PPP D407-667-105
Location:_____
PPP Rev:_____ C

Dart Aerospace Ltd

W/O:		WORK ORDER CHANGES					
DATE	STEP	PROCEDURE CHANGE	By	Date	Qty	Approval Chief Eng / Prod Mgr	Approval QC Inspector

Part No: _____ **PAR #:** _____ **Fault Category:** _____ **NCR:** Yes No **DQA:** _____ **Date:** _____

Resolution: _____ **Disposition:** _____ **QA: N/C Closed:** _____ **Date:** _____

NCR:		WORK ORDER NON-CONFORMANCE (NCR)						
DATE	STEP	Description of NC Section A	Corrective Action Section B			Verification Section C	Approval Chief Eng	Approval QC Inspector
			Initial Chief Eng	Action Description Chief Eng	Sign & Date			

NOTE: Date & initial all entries

Work Order ID 68180

Thursday, April 07, 2011 1:55:52 PM

Item ID: D407-667-105 **Accept** **Setup Start**

Revision ID:

Item Name: Crosstube Fwd **Stop**

Start Date: 4/7/2011 **Start Qty:** 1.00 **Cust Item ID:**

Required Date: 4/27/2011 **Req'd Qty:** 1.00 **Customer:**

Reference:

Run Start

Approvals: **Process Plan:** _____ **Date:** _____ **Tooling:** _____ **Date:** _____

Stop

QC: _____ **Date:** _____ **SPC (Y/N):** _____ **Date:** _____

Sequence ID/ Work Center ID	Operation Description	Set Up/ Run Hours	Tool ID	Tool #	Plan Code	Accept Qty	Reject Qty	Reject Number	Insp. Stamp
280	QC21- Final Inspection - Work Order Release	0.00							
QC Quality Control	**Memo**	0.00							

11/6/3

CMF

11-06-03

Dart Aerospace Ltd

W/O:		WORK ORDER CHANGES					
DATE	STEP	PROCEDURE CHANGE	By	Date	Qty	Approval Chief Eng / Prod Mgr	Approval QC Inspector

Part No: _____ **PAR #:** _____ **Fault Category:** _____ **NCR:** Yes No **DQA:** _____ **Date:** _____

Resolution: _____ **Disposition:** _____ **QA: N/C Closed:** _____ **Date:** _____

NCR:		WORK ORDER NON-CONFORMANCE (NCR)						
DATE	STEP	Description of NC Section A	Corrective Action Section B			Verification Section C	Approval Chief Eng	Approval QC Inspector
			Initial Chief Eng	Action Description Chief Eng	Sign & Date			

NOTE: Date & initial all entries

H:\fFORMS\Quality Assurance\approved QA\NCRWO RevE

Picklist Print

Thursday, April 07, 2011 1:55:59 PM

3

Work Order ID: 68180

Parent Item: D407-667-105

Parent Item Name: Crosstube Fwd

Start Date: 4/7/2011 **Required Date:** 4/27/2011

Start Qty: 1.00 **Required Qty:** 1.00

Comments:
IPP Rev:F□05.09.01□Add holes for compatibility with Bell Skidtubes□KJ/JLM
IPP Rev:G 08-05-16 chg QC6 to QC15 DD verified by:EC
IPP Rev:H 08-06-03 update as per DSI9415 (ECN1198) DD verified by:ec
IPP Rev:I 08-07-14 add (scribe inside of tube) seq.6 DD verified by:EC
IPP Rev:J 08-07-28 update as per (par 08-013) DD verified by:EC
IPP Rev K 09.01.06 ECN 08-562 EC verified by:DD

Component Item ID/ Item Name	Replacement Item ID	Mfg/ Purch	Bin Item	Primary Location	Last Location	Route Seq ID	Unit of Measure	Qty on Hand	Qty per Kit	Total Qty	Qty Issued	Date Issued	Status
D407-667-105TRN		Manufactured	No			110	Each	0.0000	1	1			
Crosstube Turning Detail					B68064 => 1					SAD	11-05-25		
D2873-043		Manufactured	No			230	Each	24.0000	2	2			
Nut Plate Assembly					68084					RT	11-06-03		
				Location		**Loc Qty**		**Loc Code**					
				LG052		24							
					65375	4							
					66898	20							
D2873-045		Manufactured	No			230	Each	19.0000	2	2			
Nut Plate Assembly					67741					RT	11-06-03		
				Location		**Loc Qty**		**Loc Code**					
				LG052		19							
					65992	19							
D2891-1		Manufactured	No			230	Each	26.0000	2	2			
2.25 Support					70114 x 2					RT	11-06-02		
				Location		**Loc Qty**		**Loc Code**					
				LG052		26							
					~~53773~~	20							
					62595	6							

Dart Aerospace Ltd

W/O:		WORK ORDER CHANGES					
DATE	STEP	PROCEDURE CHANGE	By	Date	Qty	Approval Chief Eng / Prod Mgr	Approval QC Inspector

Part No: _____ **PAR #:** _____ **Fault Category:** _____ **NCR:** Yes No **DQA:** _____ **Date:** _____

Resolution: _____ **Disposition:** _____ **QA: N/C Closed:** _____ **Date:** _____

NCR:		WORK ORDER NON-CONFORMANCE (NCR)						
DATE	STEP	Description of NC Section A	Corrective Action Section B			Verification Section C	Approval Chief Eng	Approval QC Inspector
			Initial Chief Eng	Action Description Chief Eng	Sign & Date			

NOTE: Date & initial all entries

H:\fFORMS\Quality Assurance\approved QA\NCRWO RevE

Picklist Print

Thursday, April 07, 2011 1:55:59 PM

Work Order ID: 68180

Parent Item: D407-667-105

Parent Item Name: Crosstube Fwd

Start Date: 4/7/2011 **Required Date:** 4/27/2011

Start Qty: 1.00 **Required Qty:** 1.00

D3595-063-395	Manufactured	No	230	Each	69.0000	4	4	11-06-02
RUBBER CUSHION								

Location	Loc Qty	Loc Code	
LG055	69		
63368	17		
65361	52		x4

MS20601-AD4W10	Purchased	No	230	Each	184.0000	14	14	11-06-03
RIVET								

Location	Loc Qty	Loc Code	
LG051	184		
116186	3		
116767	82		
117193	99		x14

MS21920-20	Purchased	No	230	Each	80.0000	4	4	11-06-02
Clamp (per MIL-DTL-8783C)								

Location	Loc Qty	Loc Code	
LG050	80		
116799	30		
117279	50		x4

AN5-10A	Purchased	No	250	Each	320.0000	10	10	11/6/3
Bolt								

Location	Loc Qty	Loc Code	
ST337	320		
116704	20		
116924	50		
117010	50		
117313	200		10

Dart Aerospace Ltd

W/O:		WORK ORDER CHANGES					
DATE	STEP	PROCEDURE CHANGE	By	Date	Qty	Approval Chief Eng / Prod Mgr	Approval QC Inspector

Part No: _____ **PAR #:** _____ **Fault Category:** _____ **NCR:** Yes No **DQA:** _____ **Date:** _____

Resolution: _____ **Disposition:** _____ **QA: N/C Closed:** _____ **Date:** _____

NCR:		WORK ORDER NON-CONFORMANCE (NCR)						
DATE	STEP	Description of NC Section A	Corrective Action Section B			Verification Section C	Approval Chief Eng	Approval QC Inspector
			Initial Chief Eng	Action Description Chief Eng	Sign & Date			

NOTE: Date & initial all entries

H:\fFORMS\Quality Assurance\approved QA\NCRWO RevE

Picklist Print

Thursday, April 07, 2011 1:55:59 PM

Work Order ID: 68180

Parent Item: D407-667-105

Parent Item Name: Crosstube Fwd

Start Date: 4/7/2011 **Required Date:** 4/27/2011

Start Qty: 1.00 **Required Qty:** 1.00

AN5-30A BOLT	Purchased	No		250	Each	61.0000	4	4

Location		Loc Qty	Loc Code
ST339		61	
	114941	11	
	116003	50	

AN5-32A Bolt		Purchased	No	250	Each	153.0000	4	4

Location		Loc Qty	Loc Code
ST340		153	
	115108	43	
	115589	60	
	117161	50	

AN960JD516 Washer	NAS1149D0563J	Purchased	No	250	Each	0.0000	18	18 M117291
MS21042L5 Nut		Purchased	No	250	Each	845.0000	4	4 11/6/3

Location		Loc Qty	Loc Code
ST300		845	
	115594	85	
	116105	500	
	116548	260	

Dart Aerospace Ltd

W/O:		WORK ORDER CHANGES					
DATE	STEP	PROCEDURE CHANGE	By	Date	Qty	Approval Chief Eng / Prod Mgr	Approval QC Inspector

Part No: _____ **PAR #:** _____ **Fault Category:** _____ **NCR:** Yes No **DQA:** _____ **Date:** _____

Resolution: _____ **Disposition:** _____ **QA: N/C Closed:** _____ **Date:** _____

NCR:		WORK ORDER NON-CONFORMANCE (NCR)						
DATE	STEP	Description of NC Section A	Corrective Action Section B			Verification Section C	Approval Chief Eng	Approval QC Inspector
			Initial Chief Eng	Action Description Chief Eng	Sign & Date			

NOTE: Date & initial all entries

H:\fFORMS\Quality Assurance\approved QA\NCRWO RevE

DART AEROSPACE LTD	Work Order:	68150
Description: Crosstube High Fwd (407)	**Part Number:**	**D407-667-105**
Inspection Dwg: D407-667-145 **Rev:** C		**Page 1 of 1**

Required Dimension	Min	Max
Height	23.41	23.67
1/2 Span	45.81	46.07
Angle	54	56
Total Span	91.63	92.13

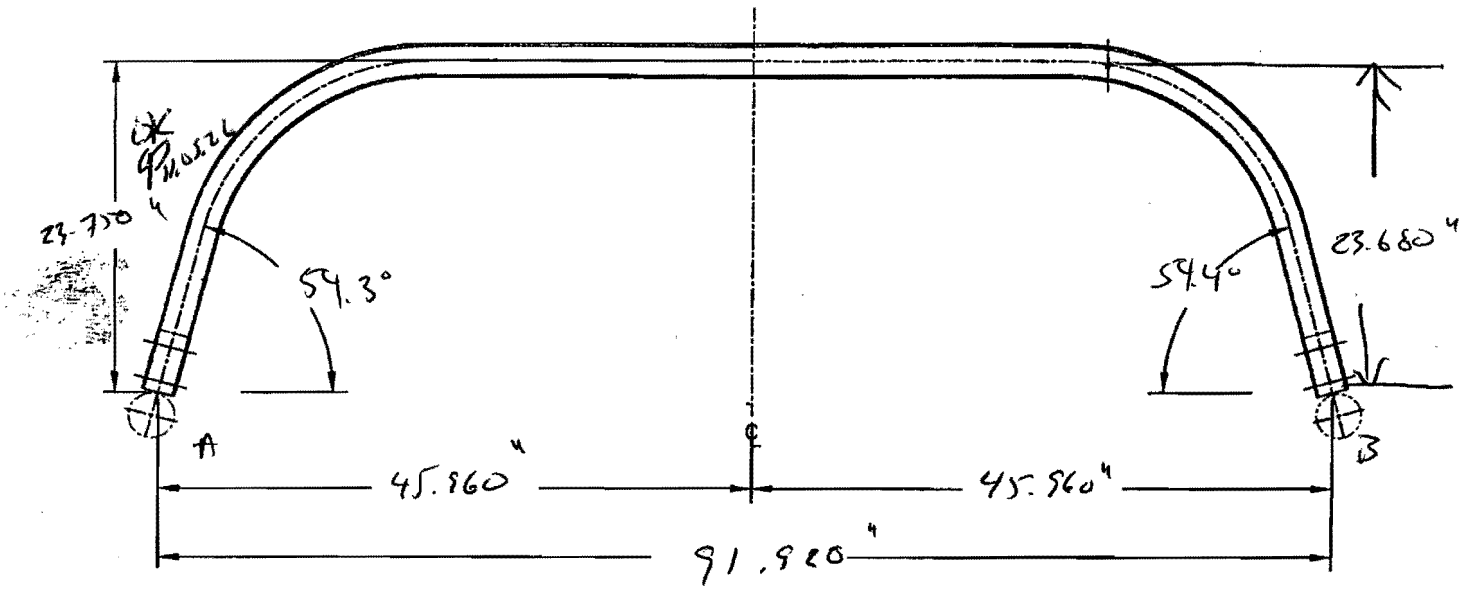

Comments
Tube bent over tolerance, in height, Acceptable
CP 11.05.26 DS104

QC15 Inspection	
Date	11/05/26

Rev	Date	Change	Revised by	Approved
A	07.02.06	New Issue	KJ/JM	
B	09.11.12	Dimensions updated per Dwg Rev C	KJ	

Dart Aerospace Ltd

W/O:		WORK ORDER CHANGES					
DATE	STEP	PROCEDURE CHANGE	By	Date	Qty	Approval Chief Eng / Prod Mgr	Approval QC Inspector

Part No: _____ **PAR #:** _____ **Fault Category:** _____ **NCR:** Yes No **DQA:** _____ **Date:** _____

Resolution: _____ **Disposition:** _____ **QA: N/C Closed:** _____ **Date:** _____

NCR:		WORK ORDER NON-CONFORMANCE (NCR)						
DATE	STEP	Description of NC Section A	Corrective Action Section B			Verification Section C	Approval Chief Eng	Approval QC Inspector
			Initial Chief Eng	Action Description Chief Eng	Sign & Date			

NOTE: Date & initial all entries

H:\fFORMS\Quality Assurance\approved QA\NCRWO RevE

Item	Qty -145	Part Number	Description
1	X	D407-667-145	CROSSTUBE ASSEMBLY (407 HIGH FWD)
2	1	D6010-115	CROSSTUBE
3	2	D2873-043	NUT PLATE
4	2	D2873-045	NUT PLATE
5	2	D2891-1	SUPPORT
6	4	D3595-063-395	RUBBER CUSHION
7	4	MS21920-20	CLAMP (OR MS21920-21)
8	14	MS20601AD4W10	RIVET (OR NAS9302B-4-10)
9	A/R	MAGNOBOND 6398	ROCKWELL SPECIFICATION RBO-120-023 ADHESIVE (TEXTRON/BELL SPEC. 299-947-100, TYPE II, CLASS 2 ADHESIVE)

GENERAL NOTES:

1) MATERIAL: MANUFACTURED FROM D6010-115
   FINISHED LENGTH = 113.20±0.020
2) FINISH: CHEMICAL CONVERSION COAT PER DART QSI 005 4.1
   PRIME INSIDE AND OUTSIDE PER DART QSI 005 4.2
   PAINT OUTSIDE PER DART QSI 005 4.2
3) TOLERANCES ARE PER DART QSI 018 UNLESS OTHERWISE NOTED.
4) UNITS: INCHES UNLESS OTHERWISE NOTED.
5) BREAK SHARP EDGES: 0.005 TO 0.010 MAX.
6) IDENTIFICATION: SCRIBE DART PART NUMBER "D407-667-145" AND BATCH NUMBER ON INSIDE OF CUFF USING VIBRATING STYLUS.
7) WEIGHT: 17.8 lbs
8) PART IS SYMMETRIC ABOUT CENTERLINE.
9) RUN CUTTER OFF PART WHERE INDICATED. BLEND OUT EDGE LONGITUDINALLY, TRANSITION SHOULD BE SMOOTH.
10) BEND PROGRESSIVELY WITH A MINIMUM OF 6 PASSES. MAXIMUM TUBE FLATTENING DUE TO BENDING IS 6% BASED ON O.D.
11) LIQUID PENETRANT INSPECT OUTSIDE SURFACE OF CROSSTUBE PER QSI 038.
12) INSTALL D2891-1 SUPPORT USING 0.03" TO 0.06" THICK LAYER OF MAGNOBOND 6398 PER QSI 015. LET CURE FOR 12 HOURS AFTER INSTALLATION AND PRIOR TO PACKAGING.
13) INSTALL MS21920-20 CLAMPS (OR -21) WITH D3595-063-395 RUBBER CUSHIONS TO SECURE THE D2891-1 SUPPORT ON TOP SIDE OF THE CROSSTUBE. ENSURE CLAMP MECHANISMS ARE LOCATED ON CROSSTUBE SUPPORTS.
14) EXTREME CARE MUST BE TAKEN TO PROTECT THE OUTSIDE SURFACE OF THE TUBE. THE OUTSIDE SURFACE MUST BE SMOOTH AND FREE FROM SURFACE DEFECTS SUCH AS SCRATCHES, NICKS, OR DENTS. DEFECTS UP TO 0.005" MAY BE BLENDED OUT LONGITUDINALLY. CIRCUMFERENTIAL GRIND MARKS ARE UNACCEPTABLE.
15) TORQUE CLAMPS 80 TO 100 IN-LB. ENSURE AT LEAST 1.5 THREADS ARE SHOWING IN SAFETY AND THAT NUT HAS NOT BOTTOMED-OUT AFTER TORQUING.

SHOP COPY
RETURN TO
ENGINEERING
UNCONTROLLED COPY
SUBJECT TO AMENDMENT
WITHOUT NOTICE
WORK ORDER
NO. 68180
11-09-7

RELEASED
05/11/12

REV.	DESCRIPTION	BY	DATE
C	REVISE GENERAL NOTES/PART LIST (ZN D7-1); REORGANIZED VIEWS AND REFORMATTED DRAWING TO CURRENT STANDARDS. D3595-063-395 WAS D2856-400-694 (ZN D6-2 & A5-2); REMOVED REF. 7 ADD TOLERANCES (ZN C6-3, C4-3, D2-3); RELOCATED FLAG #6 (ZN A8-3) PER NCR 210; MOVED TURNING DETAIL & UPDATED TOLERANCE TO SHEET 4.	RF	08.11.06
B	ADD HOLES AND NUT PLATES FOR COMPATABILITY WITH BHT/AA SKUDTUBES	PH	05.07.26
A	NEW ISSUE	CP	02.05.08

DESIGN		**DART AEROSPACE LTD** HAWKESBURY, ONTARIO, CANADA	
DRAWN	RF		
CHECKED		DRAWING NO.	REV. C
MFG. APPR.		D407-667-145	SHEET 1 OF 4
APPROVED		TITLE	SCALE
DE APPR.		CROSSTUBE ASS'Y (407 HIGH FWD)	NTS
DATE	08.11.06		

COPYRIGHT © 2002 BY DART AEROSPACE LTD
THIS DOCUMENT IS PRIVATE AND CONFIDENTIAL AND IS SUPPLIED ON THE EXPRESS CONDITION THAT IT IS NOT TO BE USED FOR ANY PURPOSE OR COPIED OR COMMUNICATED TO ANY OTHER PERSON WITHOUT WRITTEN PERMISSION FROM DART AEROSPACE LTD.

Dart Aerospace Ltd

W/O:		WORK ORDER CHANGES					
DATE	STEP	PROCEDURE CHANGE	By	Date	Qty	Approval Chief Eng / Prod Mgr	Approval QC Inspector

Part No: _____ **PAR #:** _____ **Fault Category:** _____ **NCR:** Yes No **DQA:** _____ **Date:** _____

Resolution: _____ **Disposition:** _____ **QA: N/C Closed:** _____ **Date:** _____

NCR:		WORK ORDER NON-CONFORMANCE (NCR)						
DATE	STEP	Description of NC Section A	Corrective Action Section B			Verification Section C	Approval Chief Eng	Approval QC Inspector
			Initial Chief Eng	Action Description Chief Eng	Sign & Date			

NOTE: Date & initial all entries

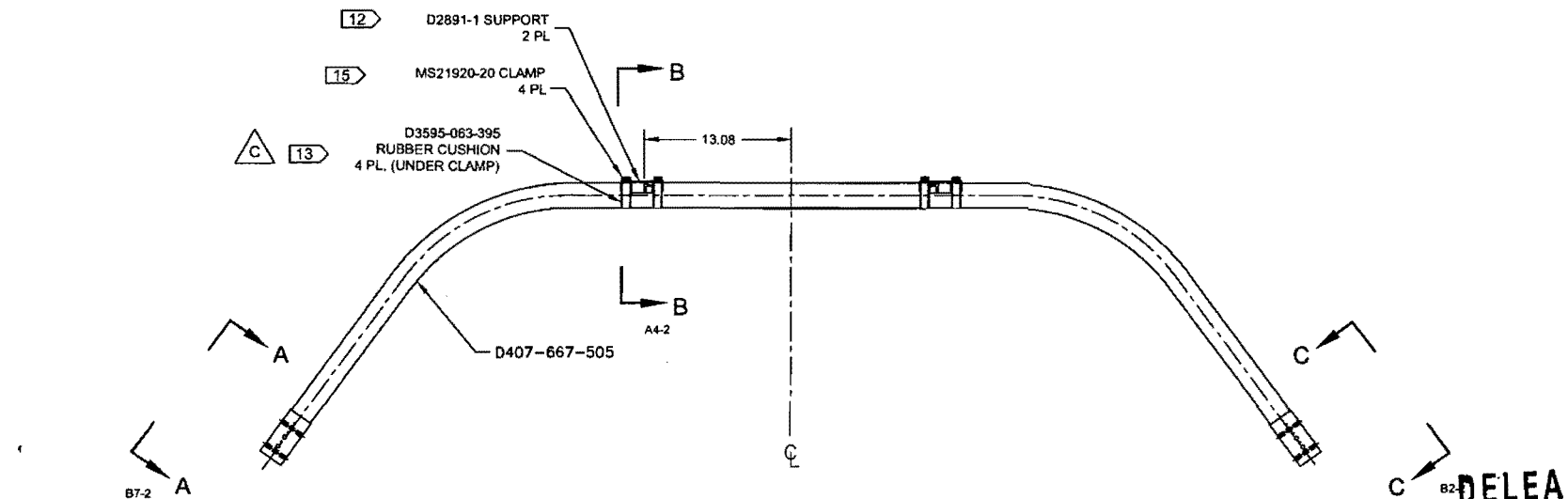

D407-667-145
ASSEMBLY DETAIL
(VIEW LOOKING FWD)

w/o 68180

RELEASED 08/11/06

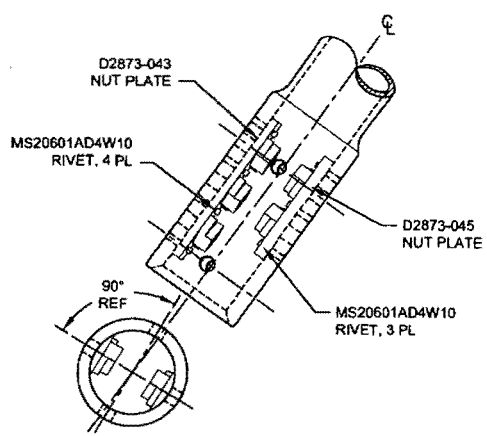

C7-2 **VIEW A-A:**
CUFF DETAIL
SCALE 4X

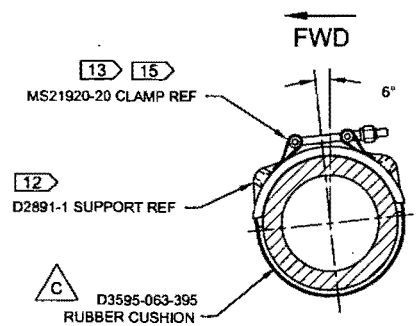

D5-2 **SECTION B-B**
SCALE 5X

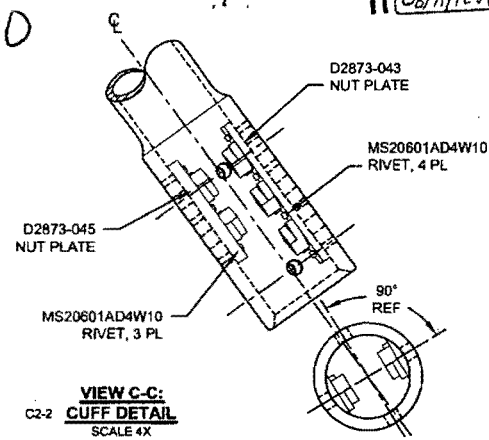

C2-2 **VIEW C-C:**
CUFF DETAIL
SCALE 4X

DESIGN		**DART AEROSPACE LTD** HAWKESBURY, ONTARIO, CANADA
DRAWN	RF	
CHECKED		DRAWING NO. D407-667-145 — REV. C — SHEET 2 OF 4
MFG. APPR.		
APPROVED		TITLE: CROSSTUBE ASSY (407 HIGH FWD) — SCALE: NTS
DE APPR.		
DATE	08.11.06	

COPYRIGHT © 2002 BY DART AEROSPACE LTD
THIS DOCUMENT IS PRIVATE AND CONFIDENTIAL AND IS SUPPLIED ON THE EXPRESS CONDITION THAT IT IS NOT TO BE USED FOR ANY PURPOSE OR COPIED OR COMMUNICATED TO ANY OTHER PERSON WITHOUT WRITTEN PERMISSION FROM DART AEROSPACE LTD.

Dart Aerospace Ltd

W/O:		WORK ORDER CHANGES					
DATE	STEP	PROCEDURE CHANGE	By	Date	Qty	Approval Chief Eng / Prod Mgr	Approval QC Inspector

Part No: _____ **PAR #:** _____ **Fault Category:** _____ **NCR:** Yes No **DQA:** _____ **Date:** _____

Resolution: _____ **Disposition:** _____ **QA: N/C Closed:** _____ **Date:** _____

NCR:		WORK ORDER NON-CONFORMANCE (NCR)						
DATE	STEP	Description of NC Section A	Corrective Action Section B			Verification Section C	Approval Chief Eng	Approval QC Inspector
			Initial Chief Eng	Action Description Chief Eng	Sign & Date			

NOTE: Date & initial all entries

H:\fFORMS\Quality Assurance\approved QA\NCRWO RevE

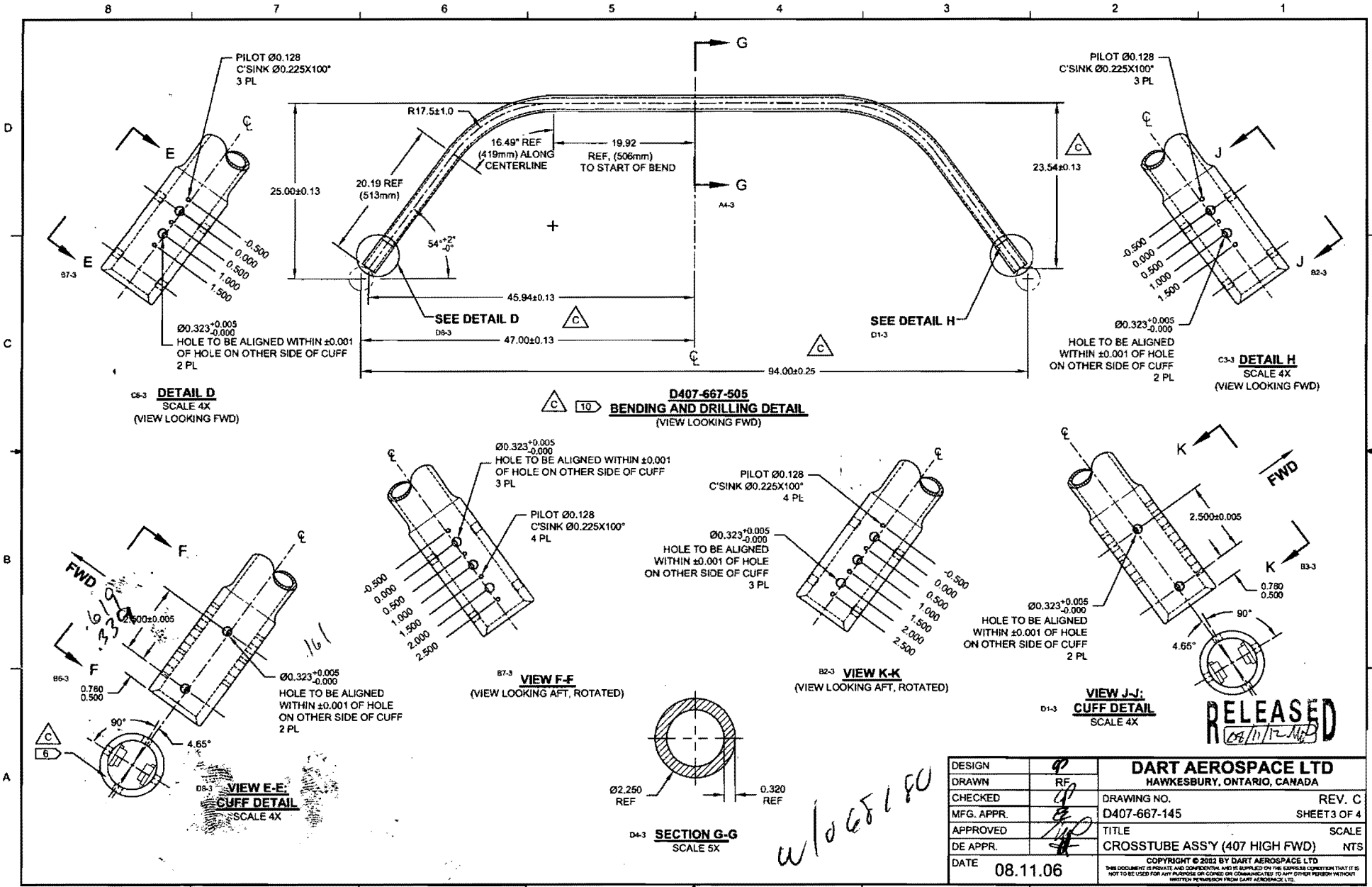
PILOT Ø0.128
C'SINK Ø0.225X100°
3 PL
R17.5±1.0
16.49° REF
(419mm) ALONG
CENTERLINE
19.92
REF, (506mm)
TO START OF BEND
25.00±0.13
20.19 REF
(513mm)
23.54±0.13
54°+2°
-0°
45.94±0.13
SEE DETAIL D
SEE DETAIL H
47.00±0.13
94.00±0.25
Ø0.323+0.005 -0.000
HOLE TO BE ALIGNED WITHIN ±0.001
OF HOLE ON OTHER SIDE OF CUFF
2 PL
-0.500
0.000
0.500
1.000
1.500
DETAIL D
SCALE 4X
(VIEW LOOKING FWD)
D407-667-505
BENDING AND DRILLING DETAIL
(VIEW LOOKING FWD)
DETAIL H
SCALE 4X
(VIEW LOOKING FWD)
Ø0.323+0.005 -0.000
HOLE TO BE ALIGNED WITHIN ±0.001
OF HOLE ON OTHER SIDE OF CUFF
3 PL
PILOT Ø0.128
C'SINK Ø0.225X100°
4 PL
2.500
VIEW F-F
(VIEW LOOKING AFT, ROTATED)
PILOT Ø0.128
C'SINK Ø0.225X100°
4 PL
Ø0.323+0.005 -0.000
HOLE TO BE ALIGNED
WITHIN ±0.001 OF HOLE
ON OTHER SIDE OF CUFF
3 PL
VIEW K-K
(VIEW LOOKING AFT, ROTATED)
FWD
2.500±0.005
0.780
0.500
90°
4.65°
VIEW J-J:
CUFF DETAIL
SCALE 4X
VIEW E-E:
CUFF DETAIL
SCALE 4X
Ø2.250
REF
0.320
REF
SECTION G-G
SCALE 5X
RELEASED
DESIGN
DRAWN RF
CHECKED
MFG. APPR.
APPROVED
DE APPR.
DATE 08.11.06
DART AEROSPACE LTD
HAWKESBURY, ONTARIO, CANADA
DRAWING NO. D407-667-145
REV. C
SHEET 3 OF 4
TITLE CROSSTUBE ASS'Y (407 HIGH FWD)
SCALE NTS
COPYRIGHT © 2002 BY DART AEROSPACE LTD

Dart Aerospace Ltd

W/O:		WORK ORDER CHANGES					
DATE	STEP	PROCEDURE CHANGE	By	Date	Qty	Approval Chief Eng / Prod Mgr	Approval QC Inspector

Part No: _____ **PAR #:** _____ **Fault Category:** _____ **NCR:** Yes No **DQA:** _____ **Date:** _____

Resolution: _____ **Disposition:** _____ **QA: N/C Closed:** _____ **Date:** _____

NCR:		WORK ORDER NON-CONFORMANCE (NCR)						
DATE	STEP	Description of NC Section A	Corrective Action Section B			Verification Section C	Approval Chief Eng	Approval QC Inspector
			Initial Chief Eng	Action Description Chief Eng	Sign & Date			

NOTE: Date & initial all entries

H:\fFORMS\Quality Assurance\approved QA\NCRWO RevE

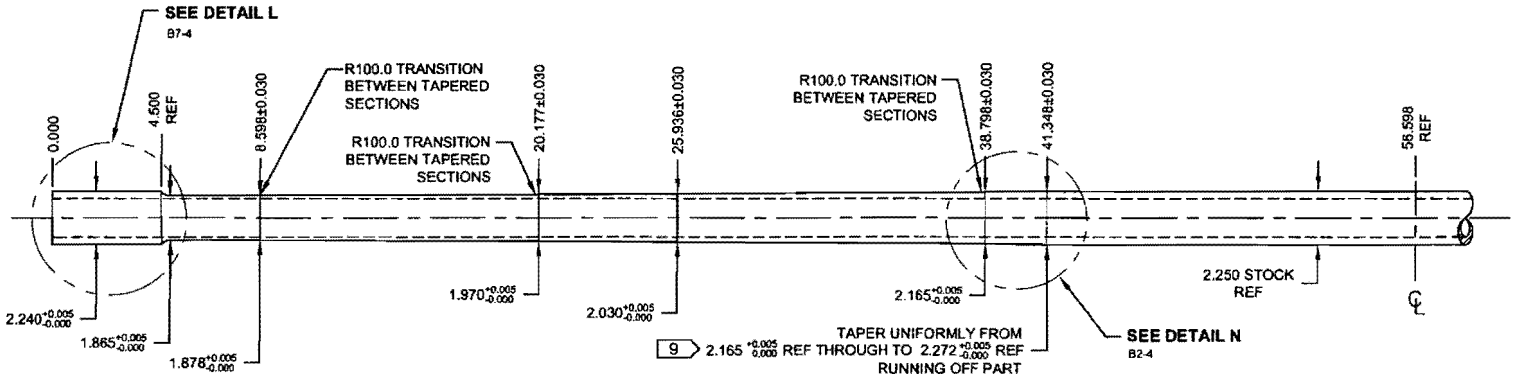

C TURNING DETAIL

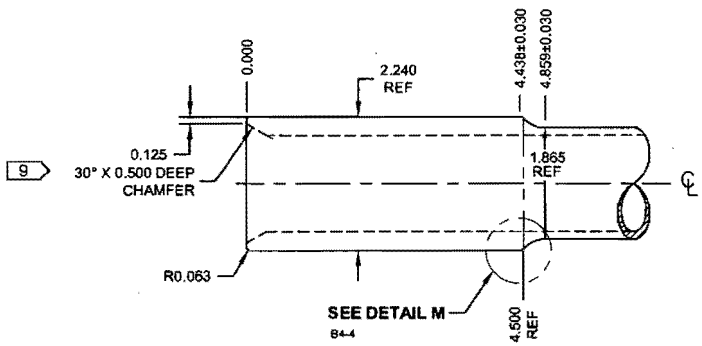

D7-4 **DETAIL L: CROSSTUBE CUFF**
NOT TO SCALE

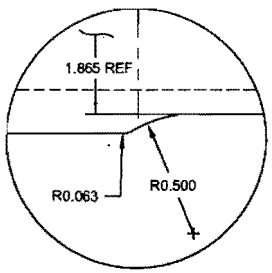

B6-4 **DETAIL M: CUFF TRANSITION**
NOT TO SCALE

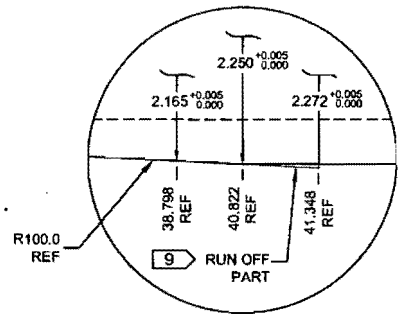

C3-4 **DETAIL N: TAPER RUN-OFF**
NOT TO SCALE

w/o 48180

RELEASED 08/11/06

DESIGN		**DART AEROSPACE LTD** HAWKESBURY, ONTARIO, CANADA
DRAWN	RF	
CHECKED		DRAWING NO. D407-667-145 — REV. C — SHEET 4 OF 4
MFG. APPR.		
APPROVED		TITLE: CROSSTUBE ASS'Y (407 HIGH FWD) — SCALE: NTS
DE APPR.		
DATE	08.11.06	

COPYRIGHT © 2002 BY DART AEROSPACE LTD
THIS DOCUMENT IS PRIVATE AND CONFIDENTIAL AND IS SUPPLIED ON THE EXPRESS CONDITION THAT IT IS NOT TO BE USED FOR ANY PURPOSE, OR COPIED OR COMMUNICATED TO ANY OTHER PERSON WITHOUT WRITTEN PERMISSION FROM DART AEROSPACE LTD.

Dart Aerospace Ltd

W/O:	WORK ORDER CHANGES						
DATE	STEP	PROCEDURE CHANGE	By	Date	Qty	Approval Chief Eng./ Prod Mgr	Approval QC Inspector

Part No: _____ PAR #: _____ Fault Category: _____ NCR: Yes No DQA: _____ Date: _____

Resolution: _____ Disposition: _____ QA: N/C Closed: _____ Date: _____

NCR:	WORK ORDER NON-CONFORMANCE (NCR)						
DATE	STEP	Description of NC Section A	Corrective Action Section B			Verification Section C	Approval Chief Eng	Approval QC Inspector
			Initial Chief Eng	Action Description Chief Eng	Sign & Date			

NOTE: Date & initial all entries

H:\FORMS\Quality Assurance\approved QA\NCRWO RevE

5.0 PARTS LIST

5.1 HIGH GEAR CROSSTUBES

Item	Qty -101	Qty -201	Qty -103	Qty -203	Qty -105	Qty -205	Part Number	Description
	X						**D206-667-101**	**CROSSTUBE INSTALLATION, 206A/B HIGH FWD**
		X					**D206-667-201**	**CROSSTUBE INSTALLATION, 206A/B HIGH AFT**
			X				**D206-667-103**	**CROSSTUBE INSTALLATION, 206L/L-1/L-3/L-4 HIGH FWD**
				X			**D206-667-203**	**CROSSTUBE INSTALLATION, 206L/L-1/L-3/L-4 HIGH AFT**
					X		**D407-667-105**	**CROSSTUBE INSTALLATION, 407 HIGH FWD**
						X	**D407-667-205**	**CROSSTUBE INSTALLATION, 407 HIGH AFT**
1	1						D206-667-141	CROSSTUBE ASSEMBLY, 206A/B HIGH FWD
2		1					D206-667-241	CROSSTUBE ASSEMBLY, 206A/B HIGH AFT
3			1				D206-667-143	CROSSTUBE ASSEMBLY, 206L/L-1/L-3/L-4 HIGH FWD
4				1			D206-667-243	CROSSTUBE ASSEMBLY, 206L/L-1/L-3/L-4 HIGH AFT
5					1		D407-667-145	CROSSTUBE ASSEMBLY, 407 HIGH FWD
6						1	D407-667-245	CROSSTUBE ASSEMBLY, 407 HIGH AFT
10	*2	*2	*2		*2		D2891-1	SUPPORT
11				*2			D2892-1	SUPPORT
12						*1	D2894-1	SUPPORT
13	*4	*4	*4		*4		D3595-063-395	RUBBER CUSHION
14				*4			D3595-063-450	RUBBER CUSHION
15						*2	D3595-075-430	RUBBER CUSHION
16	*4	*4	*4		*4		MS21920-20	CLAMP
17				*4		*4	MS21920-22	CLAMP
18						*2	MS21920-25	CLAMP (OR MS21920-24)
19	4	4	4		4		AN5-32A	BOLT
20				4		4	AN5-34A	BOLT
21	4	4	4	4	4	4	MS21042L5	NUT (OR MS21042-5)
22	8	8	8	8	8	8	NAS1149C0563J	WASHER (OR AN960JD516)
23						*2	D3190-1	CHAFING SHIELD
40	*2		*2	*2	*2	*2	D2873-043	NUT PLATE
41	*2		*2	*2	*2	*2	D2873-045	NUT PLATE
42		2					D2872-043	NUT PLATE
43		2					D2872-045	NUT PLATE
44	10		10				AN5-7A	BOLT
45		10		10	10	10	AN5-10A	BOLT
46	4	10	4		4		AN5-30A	BOLT
47				4		4	AN5-32A	BOLT
48			12				AN970-4	WASHER (OPTIONAL)
49		6					MS21042L5	NUT (OR MS21042-5)
50	10	12	10	10	10	10	NAS1149C0563J	WASHER (OR AN960JD516)
60		1					D3039-3	CENTER DRILL (TOOLING, NOT INSTALLED)

*REFERENCE ONLY. PARTS ARE INCLUDED IN D206-667-141/-143/-241/-243 & D407-667-145/-245 ASSEMBLIES ABOVE

• COPYRIGHT © 2001 BY DART AEROSPACE LTD •
THIS DOCUMENT IS PRIVATE AND CONFIDENTIAL AND IS SUPPLIED ON THE EXPRESS CONDITION THAT IT IS NOT TO BE USED FOR ANY PURPOSE OR COPIED OR COMMUNICATED TO ANY OTHER PERSON WITHOUT WRITTEN PERMISSION FROM DART AEROSPACE LTD.

ACUREN

LIQUID PENETRANT TEST REPORT

P- 05612

PAGE 1 OF 1

CLIENT: DART AEROSPACE
ATTENTION: CHRISTACE / IAN / LYNDA
ADDRESS: 1270, ABERDEEN RD, HAWKESBURY, ON

DATE: June-01-2011 TIME: AM ☑ PM ☐
ACUREN JOB NO. 188-11-02138
PO/WO NO. 14223
WORK LOCATION: AS ADDRESS
ACCEPTANCE STD. ASTM 1417/CSTE 33 REV./DATE 2005

PROJECT: WET FLUORESCENT LIQUID PENETRANT INSPECTION ON 4 "CROSSTUBES"

ITEM(S) EXAMINED: — SEE BELOW

JOB DESCRIPTION

PROCEDURE NO. LT-002 REV./DATE 2008 | TECHNIQUE NO. LT-002 REV./DATE 2008

PART NO. | MATERIAL: ALODINE ALUMINUM | THICKNESS: N/A

SCOPE: PERFORMED A WET FLUORESCENT L.P. INSPECTION ON 100% OF THE EXTERNAL SURFACE ON 4 CROSSTUBES

TEST DETAILS

METHOD: ☑ FLUORESCENT ☐ VISIBLE
FAMILY BRAND: MAGNAFLUX
PENETRANT: ZL-67 — MINIMUM DWELL TIME 10 MIN.
PENETRANT REMOVER: H_2O — MINIMUM DRY TIME >10 MIN.
DEVELOPER: SKD-S2 — MINIMUM DWELL TIME 10 MIN.
DEVELOPER TYPE: ☑ NON AQUEOUS ☐ AQUEOUS ☐ DRY

☑ WATER WASH ☐ SOLVENT REMOVABLE ☐ POST EMULSIFIED
BLACK LIGHT S/N 137-98 ☐ OUTPUT > 1000 μ W/CM² ☑ AMBIENT < 2 fc
LIGHTING EQUIP. ☐ FLASHLIGHT ☐ TROUBLELIGHT ☐ OUTPUT>100 fc @ SURFACE
OTHER
LIGHT METER S/N | CAL DUE DATE Aug/05/2011

TEST SURFACE

SURFACE CONDITION: ☐ AS GROUND ☐ AS WELDED ☐ MACHINED ☐ SHOT BLASTED ☑ CLEAN BARE METAL
SURFACE TEMPERATURE: ☐ < - 4°C/ 20°F ☐ - 4°C/ 20°F TO 10°C/50°F ☑ 10°C/50°F TO 52°C/125°F ☐ > 52°C/125°F

RESULTS- (☐ METRIC ☐ IMPERIAL)

1	CROSSTUBE W.O.ID 68180	✓	ITEM ID	D407-667-105	FWD
2	W.O.ID 68181	✓	ITEM ID	D407-667-105	FWD
3	W.O.ID 69357	✓	ITEM ID	D412-664-203	AFT
4	W.O.ID 69359	✓	ITEM ID	D412-664-203	AFT

NO RELEVANT INDICATION WAS DETECTED AS PER APPLICABLES STANDARD

RT 11-06-01

Scope of Services
The agreement of Acuren Group Inc. to perform services extends only to those services provided for in writing. Under no circumstances shall such services extend beyond the performance of the requested services. It is expressly understood that all descriptions, comments and expressions of opinion reflect the opinions or observations of Acuren Group Inc. based on information and assumptions supplied by the owner/operator and are not intended nor can they be construed as representations or warranties. Acuren Group Inc. is not assuming any responsibilities of the owner/operator and the owner/operator retains complete responsibility for the engineering, manufacture, repair and use decisions as a result of the data or other information provided by Acuren Group Inc. In no event shall Acuren Group Inc.'s liability in respect of the services referred to herein exceed the amount paid for such services.
Standard of Care
In performing the services provided, Acuren Group Inc. uses the degree, care and skill ordinarily exercised under similar circumstances by others performing such services in the same or similar locality. No other warranty, expressed or implied, is made or intended by Acuren Group Inc.

SIGNATURES

CLIENT REPRESENTATIVE: Ian Litley (PRINT) — Ian Litley (SIGNATURE) | DTR # E44669

TECHNICIAN (SIGNATURE): | REPORT REVIEWED BY:

NAME (PRINT): YVES DESROSIERS (1ST TECHNICIAN) | 2ND TECHNICIAN | NAME | INITIALS

CGSB LEVEL 2 SNT LEVEL 2 | CGSB LEVEL ___ SNT LEVEL ___
CGSB REG. NO 3049 | CGSB REG. NO ___

WHITE – CLIENT COPY CANARY – OFFICE COPY PINK – TECHNICIAN COPY GOLD – OFFICE COPY